MAGNUM® MH325B Helical Piles

35 Ton Ultimate - 17 Ton Allowable Capacity

High-Strength 3.0" Diameter, 0.25" Wall, Round-Shaft with
Rigid Coupler & (1) 0.875" Bolt

Description

Magnum MH325B Helical Piles have 35 tons ultimate capacity and 17 tons working capacity in compression and tension. Lead sections and extensions couple together to extend helical bearing plates to the desired bearing stratum. Round shafts offer increased lateral and buckling resistance compared to solid square shafts. Capacity calculations are based on average life expectancy of over 50 years for most soil conditions. Patented Magnum Dual-Cutting Edge helical bearing plates (DCE) enhance penetration through dense soils with occasional cobbles and debris. Custom lengths and helix configurations are available upon request. See Magnum Technical Reference Manual for additional information including design tools, prescriptive specifications and example plans.

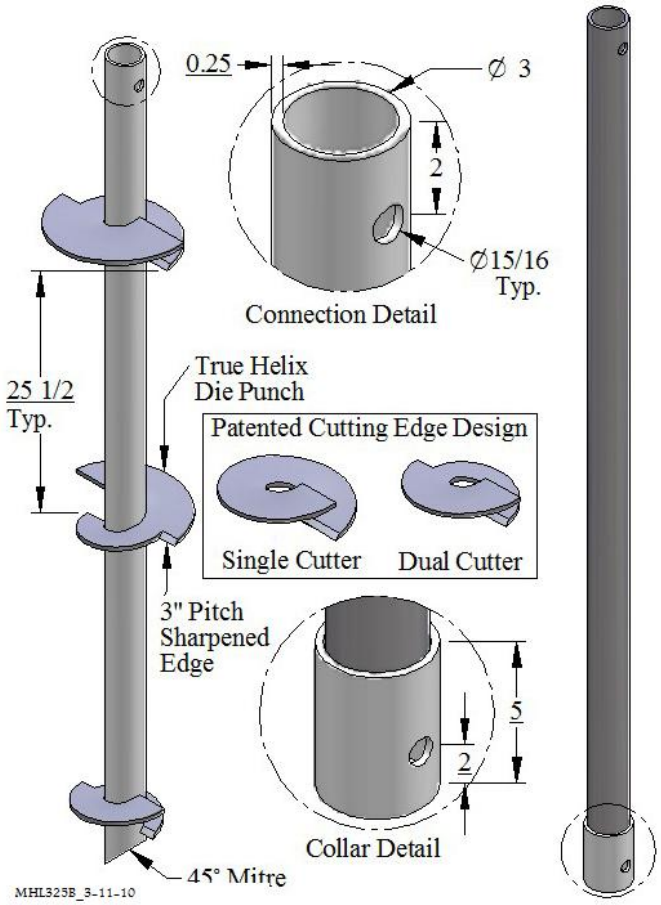

Lead - MHL325B6K8D10D12DG

Extension - MHE325B6G

STEEL SPECIFICATIONS	
SHAFT	HSS 3.00" x 0.25" Wall ASTM A513 65 KSI, or Equivalent
I	1.99 in^4
Ag	2.10 in^2
S	1.33 in^3
COUPLING	Outer 0.25" Sleeve
BOLTS	(1) 0.875" Diam. SAE Grade 5 /ASTM A325
BLADES	0.375" Thick, Helix Die-Pressed ASTM A36, or Better
COATING OPTIONS	Hot-Dip Galvanized (G), Bare Steel (NG), Epoxy Powder Coated (EP)

PROPERTIES	
8 ft^{-1}	Ultimate Capacity-to-Torque Ratio
8,700 ft-lbs	Maximum Installation Torque
STRUCTURAL CAPACITY	
68 Tons	Ultimate Capacity
34 Tons	Allowable Capacity
CAPACITY BY TORQUE	
35 Tons	Ultimate Compression & Tension
17 Tons	Allowable Compression & Tension

Note: Helical piles shall be installed to appropriate depth into suitable bearing stratum as determined by geotechnical engineer or local practice. Capacity by torque is based on advancing pile to maximum installation torque. A minimum factor of safety of 2.0 is recommended for determining allowable capacity from correlations with final installation torque. Deflections of 0.05" to 1.0" are typical at allowable capacity. A higher factor of safety may be required for tolerable deflections. For tension capacity, helical bearing plates must be deeply embedded. Load tests are recommended when practical.

3.0" Product Line Helical Bearing Plate
Specifications & Available Configurations

0.375" Thick; ASTM A36 or Higher
3.00 " Helix Pitch
8", 10", 12", 14" Diameter
Standard Circular Helix, or
Patented Dual Cutting Edge Helix
Sharpened Edges - All Helix
*3 ft. Lead or Extension - up to 2 helical bearing plates
* 6 ft. Lead or Extension - up to 3 helical bearing plates
*10 ft. Lead or Extension - up to 6 helical bearing plates
*15 ft. Lead or Extension - up to 8 helical bearing plates
** Standard Stocking Length*

All Magnum Steel & Products Made in U.S.A.

Magnum Piering, Inc.
6082 Schumacher Park Dr.
West Chester, OH 45069
800-822-7437
www.magnumpiering.com

© Copyright 2009-10 Magnum Piering, Inc. All Rights Reserved.
U.S. Patents 6,058,662 and 5,234,287; Other Patents Pending.