MAGNUM® MP1001-3 Plate Bracket

Allowable Capacity 26 Tons

8.00” x 21.00” x 0.375” Plate with 18 – 0.50” Thru Holes & 3.00" I.D. Collar
Fits MH313, MH313R, MH325, and MH325R Magnum® Helical Piles
and MP313 and MP325 Magnum® Steel Push Piers

SPECIFICATIONS	
Collar Tube	0.37 in. x 3.00 in. I.D. ASTM A513 GR65+
Configuration	8.00” x 21.00” x 0.375” Plate with 18 – 0.50” Thru Holes for Expansion Anchors
Pile Connection	(1, 2, or 3) 0.75" SAE GR8 / ASTM A480
Surface Coating	Galvanized per ASTM A153/A123 (G) or Standard Magnum Blue Paint (P)
Compatibility	MH313, MH313R, MH325, MH325R, MP313, and MP325

CONNECTION TYPE	ULTIMATE CAPACITY 0.13 / 0.25 Wall Pile	ALLOWABLE CAPACITY 0.13 / 0.25 Wall Pile
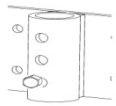 SINGLE BOLTED	10 Tons / 18 Tons	5 Tons / 9 Tons
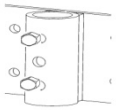 DOUBLE BOLTED	17 Tons / 35 Tons	8 Tons / 18 Tons
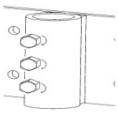 TRIPLE BOLTED	28 Tons / 53 Tons	14 Tons / 26 Tons

Description

The Magnum MP1001-3 plate bracket has 53 tons maximum ultimate capacity, 26 tons working capacity in compression and tension. The bracket consists of a collar tube with (3) 0.75” threaded bolt holes for connection to Magnum helical piles and Magnum push piers and 18 thru holes for attachment to existing concrete using concrete expansion anchors. The bracket is designed in accordance with ICC-ES document AC358 as well as IBC, ACI, and AISC codes. Design and detailing of the connection to the structure varies by project and is the responsibility of registered design professional including maximum concrete span, pier spacing, concrete shear, and concrete bearing.

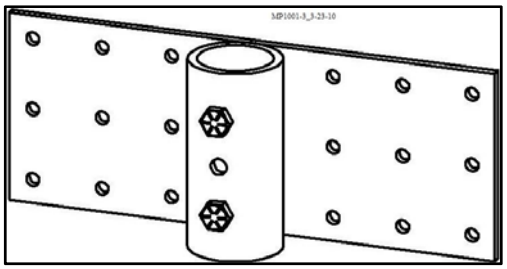

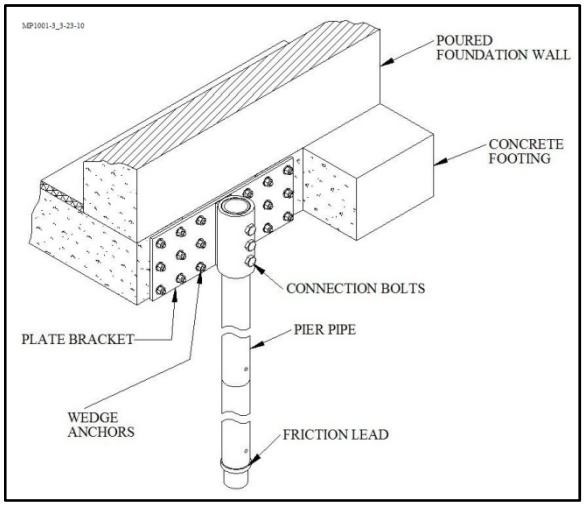

Installation Notes:
Prepare the existing foundation. For steel push pier applications, attach the bracket and Magnum ram. Install the push pier to the required pressure and load test. For helical pile applications, excavate the pier location so the helix bearing plates fit below the existing foundation and the shaft is as close as possible to the face of the foundation. Install the helical pile to the correct depth and torque. Mount the bracket by sliding down the shaft rotating into position. In both cases, lift the structure as needed using either a Magnum ram or lifting fixture. Drill holes and bolt the bracket to the pile.

Magnum Piering, Inc.
6082 Schumacher Park Dr.
West Chester, OH 45069
800-822-7437
www.magnumpiering.com

All Magnum Steel & Products Made in U.S.A.

© Copyright 2010 Magnum Piering, Inc. All Rights Reserved.
U.S. Patents 6,058,662 and 5,234,287; Other Patents Pending.

Rev. 3-23-10